DRAWING DISCLAIMER
COPYRIGHT OF THIS DRAWING IS RESERVED BY BIL GROUP LTD. IT IS ISSUED ON CONDITION THAT IT IS NOT REPRODUCED, COPIED, OR DISCLOSED TO A THIRD PARTY EITHER WHOLLY OR IN PART WITHOUT THE CONSENT IN WRITING OF BIL GROUP LTD.

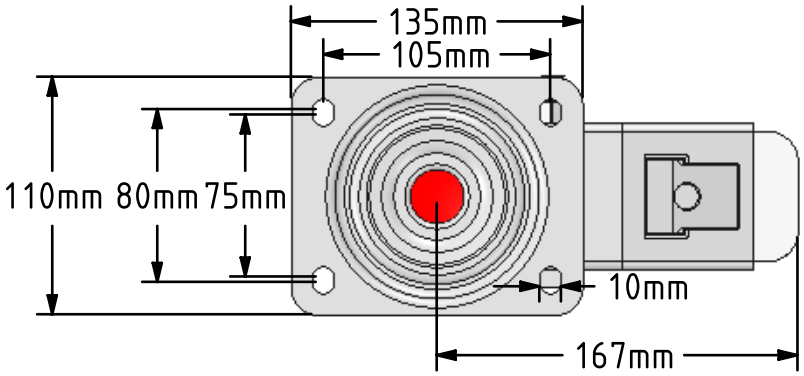


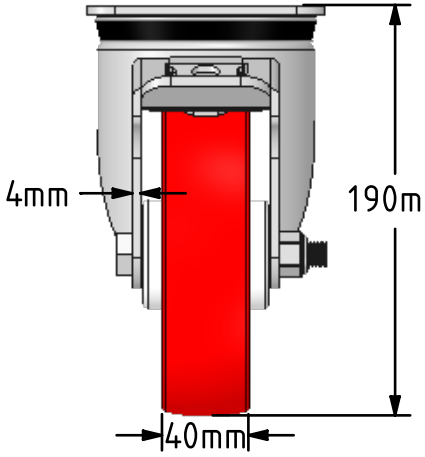


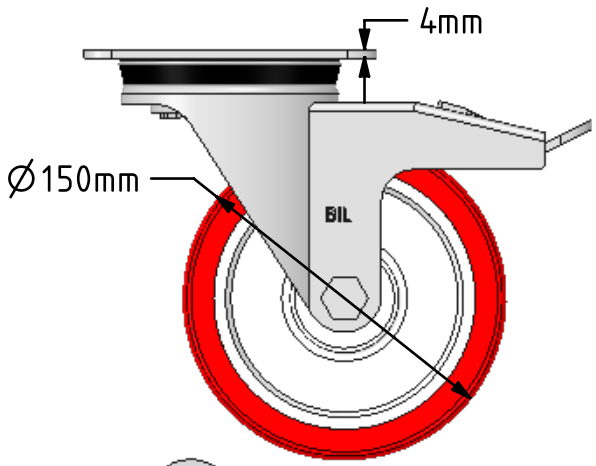


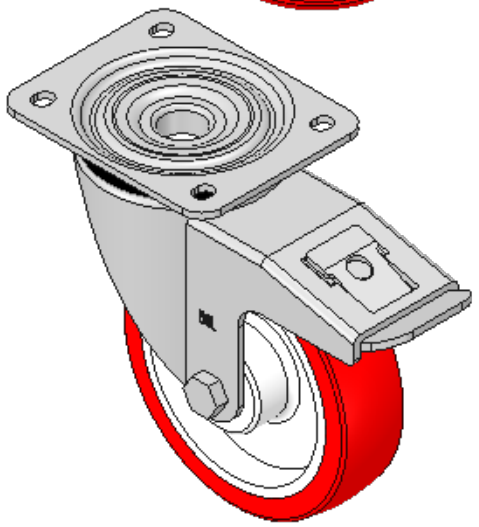

Description:
BZPH150NPSWB

Pressed steel swivel castor with a top plate fixing fitted with a red polyurethne on white nylon centred wheel with a plain bearing and total lock brake. Wheel diameter 150mm, tread width 40mm, overall height 190mm, top plate 135mm x 110mm, hole centres 105mm x 80/75mm. Load capacity 500kg.

| | NAME | DATE |
|---|---|---|
| DRAWN | Matt | 13/02/18 |
| APPROVED BY | Chris | 13/02/18 |
| SCALE | 2:7 | 13/02/18 |
| WEIGHT | 2.502kg | 13/02/18 |

UNLESS OTHERWISE SPECIFIED DIMENSIONS ARE IN MILLIMETRES

Unspecified Tolerances
Machining ± 0.25mm
Fabrication ± 1mm

BIL Group Ltd, Porte Marsh Road, Calne
Wiltshire, SN11 9BW, United Kingdom
Tel +44 (0)1249 822 222 Fax: +44 (0)1249 822 300
www.bilgroup.co.uk

TITLE
BZPH150NPSWB

| SIZE | DWG NO. | REV |
|---|---|---|
| A4 | BILCW03BZPH150NPSWB__02 | 2 |

FILE NAME BILCW03BZPH150NPSWB__02.PDF SHEET 1 OF 1